Screw pumps PAVE - submerged motor

For hydraulic oil, lubricating oils
Admissible delivery pressure = 75 bar at 2900 rpm

Main field of application:
Oil submerged pump for hydraulic power packs

Section and components

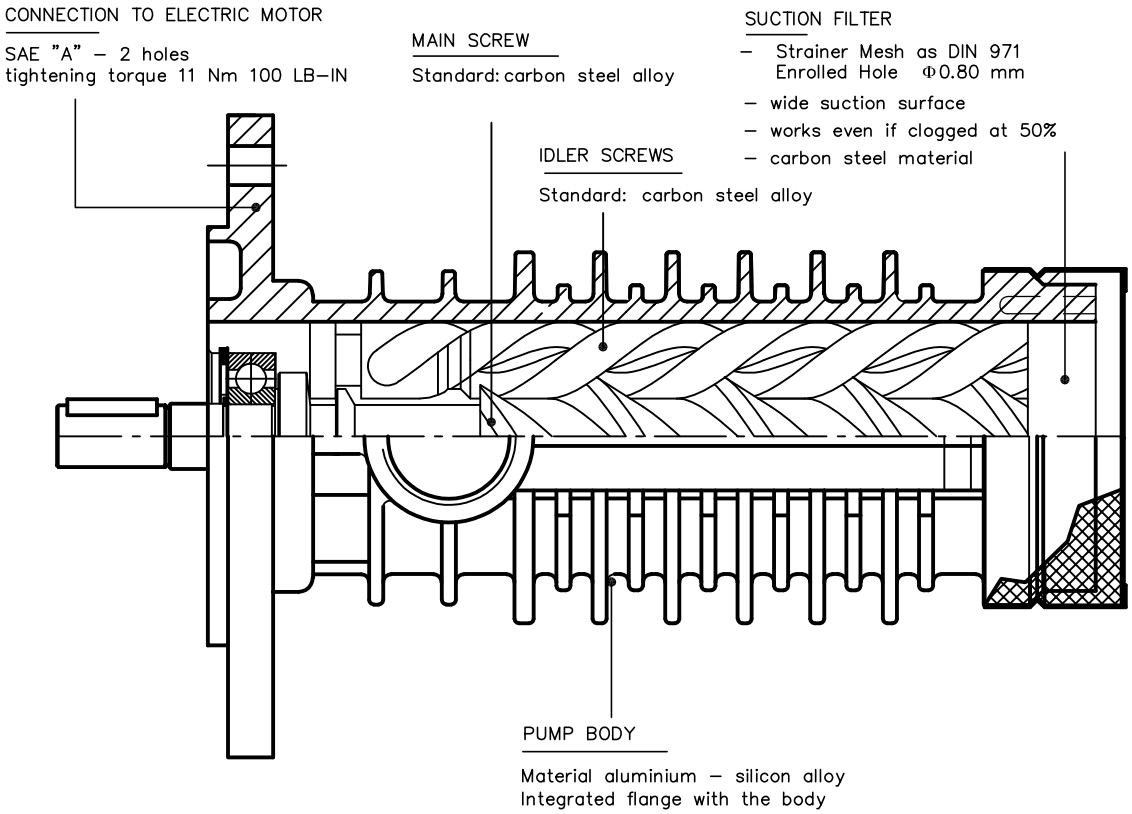

Functional characteristics standard version

Delivery flow	3 to 75 l/min (da 0,8 to 20 USGPM)	
Admissible delivery pressure*	up to 75 bar (1087 psi) continuous, 120 bar (1740 psi) peak at 2900 rpm	
Admissible suction pressure	submerged in oil	
Kinematics viscosity	10 to 400 cSt (60 to 2000 SSU)	For different values contact SEIM
Admissible temperature	0 to 100°C (32 to 248°F)	For different values contact SEIM
Driving speed	750 to 3600 rpm	
Suction Stainer	Strainer Mesh as DIN 971 - Enrolled Hole Φ 0.80 mm	
Recommended fluid filtration	ISO4406 CODE 20/18/15 - NAS CODE 10	
Average noise level	56 dB(A) at 2900 rpm	
Direction of rotation	clockwise, as seen from the driving side	

* Reduced pressure limits apply due to fluid viscosity and driving speed
Consult the performance charts for the individual pumps size
For different functional characteristics, please contact our sales department

Screw pumps PAVE - submerged motor

For hydraulic oil, lubricating oils
Admissible delivery pressure = 75 bar at 2900 rpm

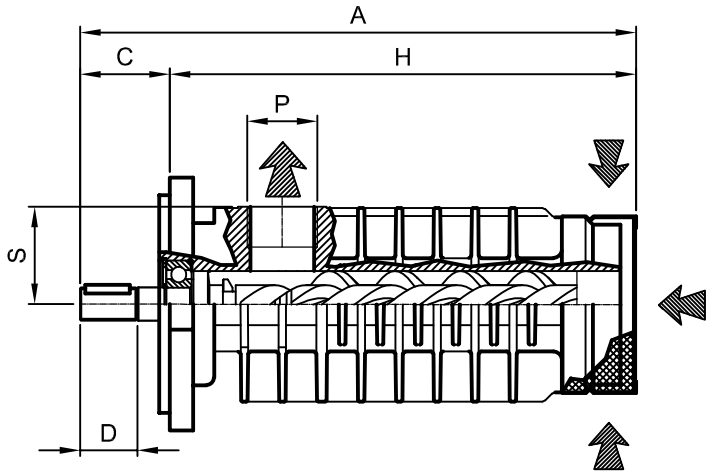

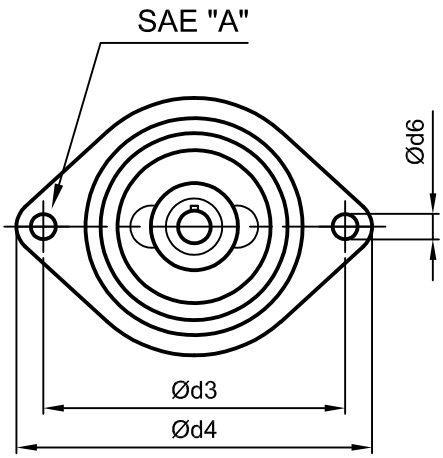

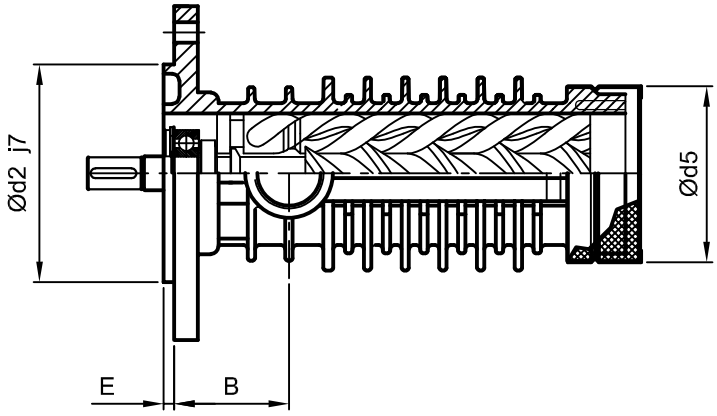

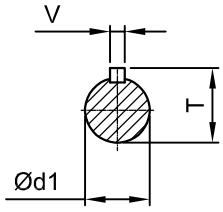

PM - STE - PAVE - ENG 03-22 - 5

Dimensional chart (mm)

MODEL	A	B	C	D	E	H	P GAS	S	T	V	d1 Ø	d2 Ø	d3 Ø	d4	d5 Ø	d6 Ø
PAVE020	244	58	40	34	4	204	1/2"	37	16	5	14	82,5	106	125	65	12
PAVE025	244	58				204										
PAVE025C	252	51				212	1"	44							85	
PAVE029	252	51				212										
PAVE032	261	51				221		46,5								

SEIM srl
Via A. Volta 17
20090 Cusago (MI) ITALY
Tel. (+39) 02.90.39.21.1
Fax. (+39) 02.90.39.21.41
e-mail: seim@seim.it

www.seim.it

SEIM reserves the right to introduce dimensional changes or variation to the products of this technical data